WITH MORE THAN 60 YEARS OF EXPERIENCE IN COMPRESSOR TECHNOLOGY AND HIGHLY COMMITTED EMPLOYEES, OUR FOCUS IS TO DEVELOP AND APPLY THE ADVANCED COMPRESSOR TECHNOLOGIES TO ACHIEVE STANDARD SETTING PERFORMANCE FOR LEADING PRODUCTS AND BUSINESSES AROUND THE WORLD.

60 YEARS 1956-2016

SECOP

HERMETIC COMPRESSORS FOR AC VOLTAGE

R404A/R507 • 220-240 V • 50 Hz

Compressor	Code number	Application	ASHRAE Capacity [W] T_c=54.4°C, T_{liq}=32.2°C, T_{suc}=32.2°C Evaporating temperature [°C]						ASHRAE LBP rating point -23.3°C / 54.4°C		ASHRAE MBP rating point -6.7°C / 54.4°C		ASHRAE HBP rating point 7.2°C / 54.4°C		Displacement	Voltage and frequencies (* dual frequency type with 50/60 Hz)	Compressor cooling (refer to data sheet)
			-35	-15	-5	0	10	15	Cooling capacity [W]	COP [W/W]	Cooling capacity [W]	COP [W/W]	Cooling capacity [W]	COP [W/W]	[cm³]		
TL4CL	102U2071	LBP	75	240	391				152	1.03	317	1.44			3.86	198-254 V, 50 Hz	F2
TL4.5CLX	102U2111	LBP	102	302					198	1.05					4.63	198-254 V, 50 Hz	F2
TL4DL	102U2038	M/HBP		227	363	455	672				293	1.30	531	1.88	3.86	198-254 V, 50 Hz	F2
NL7CLX	105F3710	LBP	201	577	878				389	1.32	718	1.65			7.27	198-254 V, 50 Hz	F2
NL7CLX	105F3714	LBP	201	577	878				389	1.32	718	1.65			7.27	198-254 V, 50 Hz	F2
NL8.4CLX	105F3800	LBP	218	627	955				423	1.28	781	1.60			8.35	198-254 V, 50 Hz	F2
NL9CLX	105F3802	LBP	236	675					458	1.34					8.35	198-254 V, 50 Hz	F2
FR6CL	103U2670	LBP	149	394	606				268	1.04	494	1.23			6.23	198-254 V, 50 Hz	F2
FR6DL	103U2680	M/HBP		404	600	731	1059				491	1.24	838	1.63	6.23	198-254 V, 50 Hz	F2
FR7.5CL	103U2790	LBP	158	433	658				294	1.03	538	1.19			6.93	198-254 V, 50 Hz	F2
FR8.5CL	103U2890	LBP	171	492					333	0.98					7.95	198-254 V, 50 Hz	F2
SC10CL	104L2523	LBP	132	664	1080				402	1.13	876	1.50			10.29	198-254 V, 50 Hz	F2
SC12CL	104L2623	LBP	165	859	1399				517	1.10	1135	1.55			12.87	198-254 V, 50 Hz	F2
SC15CL	104L2853	LBP	180	1102	1680				698	1.20	1377	1.55			15.28	198-254 V, 50 Hz	F2
SC15CLX.2	104L2896	LBP	339	1098					725	1.18					15.28	198-254 V, 50 Hz	F2
SC18CL	104L2123	LBP	375	1222	1884				804	1.22	1539	1.55			17.69	198-254 V, 50 Hz	F2
SC18CLX.2	104L2197	LBP	415	1345					887	1.20					17.69	198-254 V, 50 Hz	F2
SCE18CLX.2	104L2196	LBP	415	1345					887	1.31					17.69	198-254 V, 50 Hz	F2
SC21CL	104L2322	LBP	442	1388					906	1.18					20.95	198-254 V, 50 Hz	F2
SC15MLX	104L2869	MBP		1119	1720	2105			763	1.20	1403	1.61	2425	2.24	15.28	198-254 V, 50 Hz	F2
SC18MLX	104L2139	MBP		1307	2004	2450			895	1.27	1636	1.70	2820	2.36	17.69	198-254 V, 50 Hz	F2
SC18MLX.3	104L2146	MBP		1386	2100	2556			960	1.34	1717	1.73	2928	2.37	17.68	198-254 V, 50 Hz	F2
SC10/10CL	104L4087	LBP	264	1329	2160				804	1.13	1753	1.50			20.58	198-254 V, 50 Hz	F2
SC12/12CL	104L4088	LBP	331	1717	2798				1034	1.10	2269	1.55			25.74	198-254 V, 50 Hz	F2
SC15/15CL	104L4089	LBP	361	2205	3361				1396	1.20	2754	1.55			30.56	198-254 V, 50 Hz	F2
SC18/18CLX.2	104L4035	LBP	824	2674					1763	1.20					35.36	198-254 V, 50 Hz	F2
SC18/18CL	104L4090	LBP	749	2443	3768				1608	1.22	3077	1.55			35.38	198-254 V, 50 Hz	F2
SC21/21CL	104L4094	LBP	885	2776					1812	1.18					41.90	198-254 V, 50 Hz	F2
GS26CLX	107B0500	LBP	662	2186					1430	1.53					26.30	198-254 V, 50 Hz	F2
GS34CLX	107B0501	LBP	1016	3116	4808				2072	1.64	3924	2.07			33.80	198-254 V, 50 Hz	F2
GS21MLX	107B0502	MBP		1711	2709	3358					2200	2.12	3954	3.09	21.20	198-254 V, 50 Hz	F2
GS26MLX	107B0503	MBP		2243	3519	4325					2866	2.20	5027	3.12	26.30	198-254 V, 50 Hz	F2
GS34MLX	107B0504	MBP		2998	4554	5527					3726	2.03	6330	2.74	33.80	198-254 V, 50 Hz	F2

Dimensions						Electrical equipment											
						LST (RSIR & RSCR) refer to data sheet for more info					Run capacitor (RC)		HST (CSIR & CSR) * alt. cable lengths avail.			LST/HST	
Height [mm]		Connectors location/I.D. [mm]			alt. connectors available	PTC starting device		PTC starting device with RC connector		ePTC	• optional • compulsory *		Starting relay	Starting capacitor	Starting device *	Cord relief	Cover
		Suction	Process	Dis-charge		Spades		Spades		Spades	Spades		Spades		Spades		
A	B	C	D	E		6.3 mm	4.8 mm	6.3 mm	4.8 mm	4.8 mm	6.3 mm	4.8 mm	6.3 mm	6.3 mm	6.3 mm		
173	169	6.2	6.2	5.0									117U6000	117U5014		103N1010	103N2010
173	169	6.2	6.2	5.0									117U6001	117U5014		103N1010	103N2010
173	169	6.2	6.2	5.0									117U6001	117U5014		103N1010	103N2010
203	197	8.2	6.2	6.2	X								117U6002	117U5015		103N1010	103N2010
203	197	8.2	6.2	6.2	X								117U6002	117U5015		103N1010	103N2010
203	197	8.2	6.2	6.2									117U6003	117U5015		103N1010	103N2010
203	197	8.2	6.2	6.2									117U6003	117U5015		103N1010	103N2010
196	191	8.2	6.2	6.2	X								117U6015	117U5015		103N1010	103N2010
196	191	8.2	6.2	6.2									117U6010	117U5015		103N1010	103N2010
196	191	8.2	6.2	6.2									117U6016	117U5015		103N1010	103N2010
196	191	8.2	6.2	6.2	X								117U6010	117U5015		103N1010	103N2010
209	203	8.2	6.2	6.2	X								117U6003	117U5017		103N1004	103N2009
209	203	8.2	6.2	6.2	X								117U6005	117U5017		103N1004	103N2009
219	213	10.2	6.2	6.2	X								117U6019	117U5017		103N1004	103N2009
219	213	10.2	6.2	6.2	X								117U6019	117U5017		103N1004	103N2009
219	213	10.2	6.2	6.2	X									117U5373	117-7027	103N1004	103N2009
219	213	10.2	6.2	6.2	X								117U6013	117U5012		103N1004	103N2009
219	213	10.2	6.2	6.2										117U5373	117-7027	103N1004	103N2009
219	213	10.2	6.2	6.2	X									117U5373	117-7027	103N1004	103N2009
219	213	10.2	6.2	6.2									117U6013	117U5012		103N1004	103N2009
219	213	10.2	6.2	6.2										117U5373	117-7027	103N1004	103N2009
219	213	10.2	6.2	6.2											117-7027	103N1004	103N2009
249	244	12.0	6.2	6.2									117U6003	117U5017		103N1004	103N2009
249	244	12.0	6.2	6.2									117U6005	117U5017		103N1004	103N2009
259	254	12.0	6.2	6.2	X								117U6019	117U5017		103N1004	103N2009
259	254	12.0	6.2	6.2									117U6013	117U5012		103N1004	103N2009
259	254	16.0	6.2	6.2											117-7027	103N1004	103N2009
259	254	16.0	6.2	6.2										117U5373	117-7027	103N1004	103N2009
259	247	12.9	6.5	8.2											117-7056		107B9101
279	267	12.9	6.5	8.2	X										117-7074		107B9101
259	247	16.1	6.5	9.7											117-7070		107B9101
279	267	16.1	6.5	9.7											117-7072		107B9101
279	267	16.1	6.5	9.7											117-7056		107B9101

R404A/R507 • 220-240 V • 50/60 Hz

Compressor	Code number	Application	ASHRAE Capacity [W] T_c=54.4°C, T_{liq}=32.2°C, T_{suc}=32.2°C Evaporating temperature [°C]						ASHRAE LBP rating point -23.3°C / 54.4°C		ASHRAE MBP rating point -6.7°C / 54.4°C		ASHRAE HBP rating point 7.2°C / 54.4°C		Displacement	Voltage and frequencies (* dual frequency type with 50/60 Hz)	Compressor cooling (refer to data sheet)
			-35	-15	-5	0	10	15	Cooling capacity [W]	COP [W/W]	Cooling capacity [W]	COP [W/W]	Cooling capacity [W]	COP [W/W]	[cm³]		
NL6.1MLX	105F3611	MBP		455	712	870			291	1.14	580	1.67	998	2.40	6.13	187-254 V, 50 Hz *	F2
NF7MLX	105F3720	MBP		548	852	1040	1506				695	1.54	1191	2.20	7.27	187-254 V, 50 Hz *	F2
SC10CLX	104L2533	L/MBP	130	655	1065	1318			397	1.11	864	1.56			10.29	198-254 V, 50 Hz *	F2
SC12CLX.2	104L2697	LBP	278	900					594	1.15					12.87	198-254 V, 50 Hz *	F2
SC10MLX	104L2506	MBP		723	1129	1382					920	1.59	1588	2.27	10.29	187-254 V, 50 Hz *	F2
SC12MLX	104L2606	MBP		887	1371	1673			585	1.15	1119	1.61	1916	2.26	12.87	187-254 V, 50 Hz *	F2

R407C • 220-240 V • 50 Hz

Compressor	Code number	Application	ASHRAE Capacity [W] T_c=54.4°C, T_{liq}=32.2°C, T_{suc}=32.2°C Evaporating temperature [°C]						ASHRAE LBP rating point -23.3°C / 54.4°C		ASHRAE MBP rating point -6.7°C / 54.4°C		ASHRAE HBP rating point 7.2°C / 54.4°C		Displacement	Voltage and frequencies (* dual frequency type with 50/60 Hz)	Compressor cooling (refer to data sheet)
			-35	-15	-5	0	10	15	Cooling capacity [W]	COP [W/W]	Cooling capacity [W]	COP [W/W]	Cooling capacity [W]	COP [W/W]	[cm³]		
SC10DL	104L2525	M/HBP		645	1053	1302	1919	2299			854	1.56	1512	2.24	10.29	198-254 V, 50 Hz	F2
SC12DL	104L2625	M/HBP		866	1409	1731	2512	2989			1145	1.62	1987	2.35	12.87	198-254 V, 50 Hz	F2
SC15DL	104L2856	M/HBP		1036	1643	2015	2933	3498			1338	1.61	2317	2.34	15.28	198-254 V, 50 Hz	F2
SC10/10DL	104L4091	M/HBP		1290	2105	2604	3838	4597			1708	1.56	3023	2.24	20.58	198-254 V, 50 Hz	F2
SC12/12DL	104L4092	M/HBP		1732	2817	3461	5024	5978			2290	1.63	3974	2.35	25.74	198-254 V, 50 Hz	F2
SC15/15DL	104L4093	M/HBP		2071	3286	4029	5865	6995			2676	1.61	4633	2.33	30.56	198-254 V, 50 Hz	F2

Dimensions						Electrical equipment											
						LST (RSIR & RSCR) refer to data sheet for more info					Run capacitor (RC)		HST (CSIR & CSR) * alt. cable lengths avail.			LST/HST	
Height [mm]		Connectors location/I.D. [mm]			alt. connectors available	PTC starting device		PTC starting device with RC connector		ePTC	• optional • compulsory *		Starting relay	Starting capacitor	Starting device *	Cord relief	Cover
		Suction	Process	Dis-charge		Spades		Spades		Spades	Spades		Spades		Spades		
A	B	C	D	E		6.3 mm	4.8 mm	6.3 mm	4.8 mm	4.8 mm	6.3 mm	4.8 mm	6.3 mm	6.3 mm	6.3 mm		
203	197	8.2	6.5	6.5									117U6022	117U5015		103N1010	103N2011
203	197	9.7	6.5	6.5	X								117U4139	117U5018		117U0349	117U1021
209	203	8.2	6.2	6.2	X								117U6005	117U5017		103N1004	103N2008
219	213	8.2	6.2	6.2	X								117U6019	117U5017		103N1004	103N2008
209	203	8.2	6.5	6.5									117U6011	117U5017		103N1004	103N2008
219	213	8.2	6.5	6.5	X								117U6011	117U5017		103N1004	103N2008

Dimensions						Electrical equipment											
						LST (RSIR & RSCR) refer to data sheet for more info					Run capacitor (RC)		HST (CSIR & CSR) * alt. cable lengths avail.			LST/HST	
Height [mm]		Connectors location/I.D. [mm]			alt. connectors available	PTC starting device		PTC starting device with RC connector		ePTC	• optional • compulsory *		Starting relay	Starting capacitor	Starting device *	Cord relief	Cover
		Suction	Process	Dis-charge		Spades		Spades		Spades	Spades		Spades		Spades		
A	B	C	D	E		6.3 mm	4.8 mm	6.3 mm	4.8 mm	4.8 mm	6.3 mm	4.8 mm	6.3 mm	6.3 mm	6.3 mm		
209	203	8.2	6.2	6.2	X								117U6005	117U5017		103N1004	103N2009
219	213	10.2	6.2	6.2	X								117U6019	117U5017		103N1004	103N2009
219	213	10.2	6.2	6.2	X									117U5373	117-7029	103N1004	103N2009
249	244	12	6.2	6.2									117U6005	117U5017		103N1004	103N2009
259	254	12	6.2	6.2									117U6019	117U5017		103N1004	103N2009
259	254	16	6.2	6.2										117U5373	117-7029	103N1004	103N2009

TL

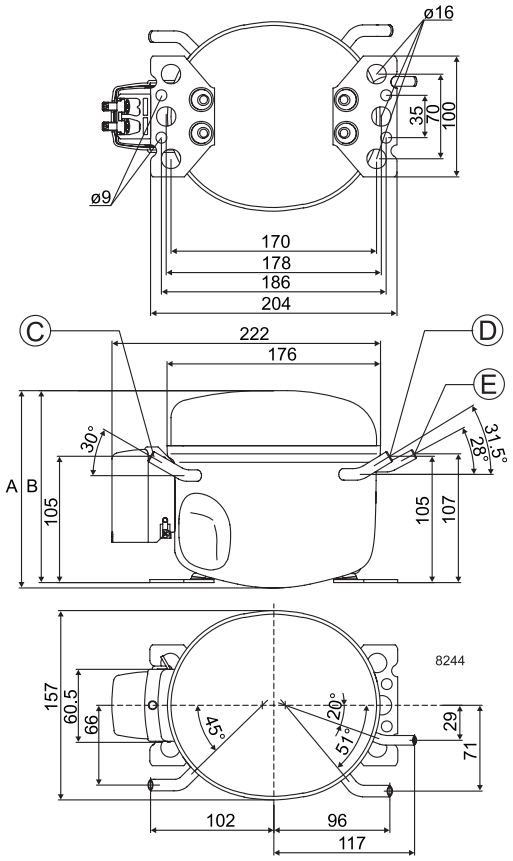
ø16
35
70
100
ø9
170
178
186
204
C
222
176
D
E
30°
31.5°
28°
A B
105
105
107
157
60.5
66
45°
20°
51°
29
71
102
96
117
8244

NL

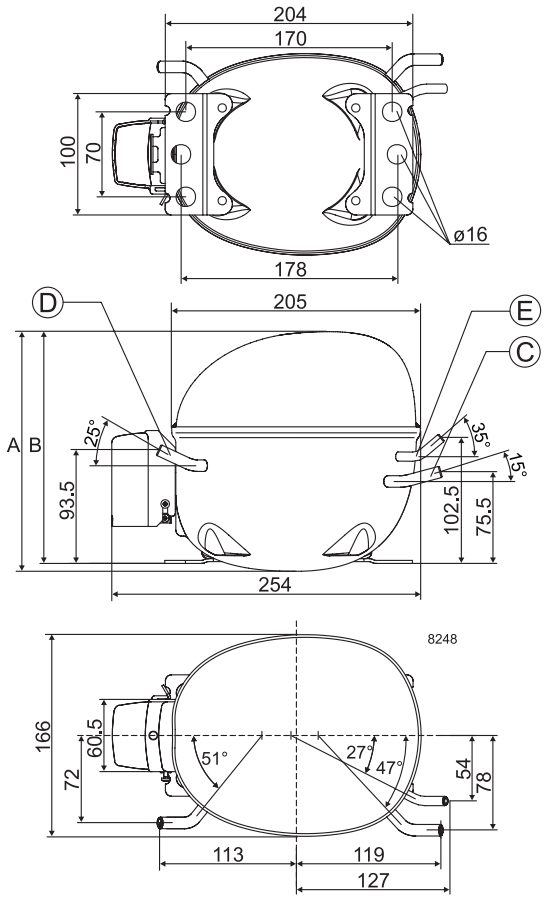
204
170
100
70
ø16
178
D
205
E
C
A B
25°
35°
15°
93.5
102.5
75.5
254
8248
166
60.5
72
51°
27°
47°
54
78
113
119
127

NF

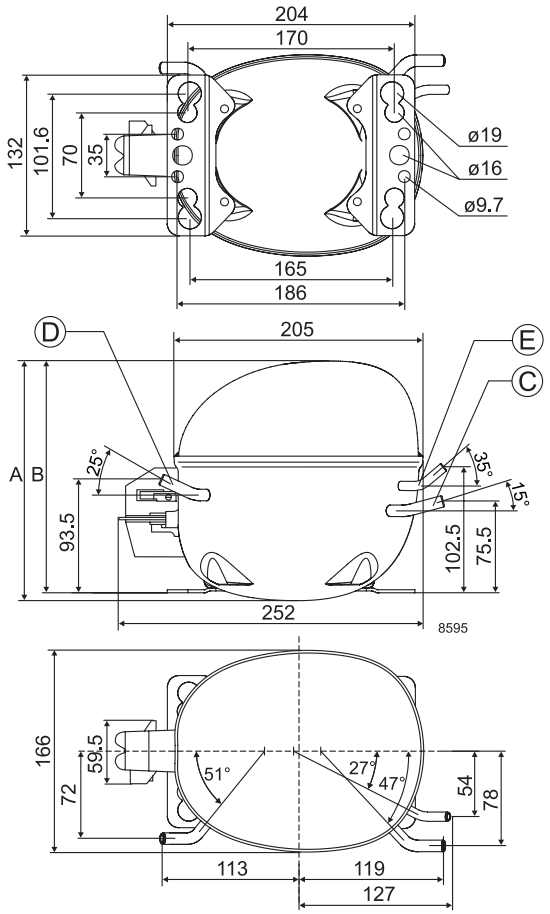
204
170
132
101.6
70
35
ø19
ø16
ø9.7
165
186
D
205
E
C
A B
25°
35°
15°
93.5
102.5
75.5
252
8595
166
59.5
72
51°
27°
47°
54
78
113
119
127

FR

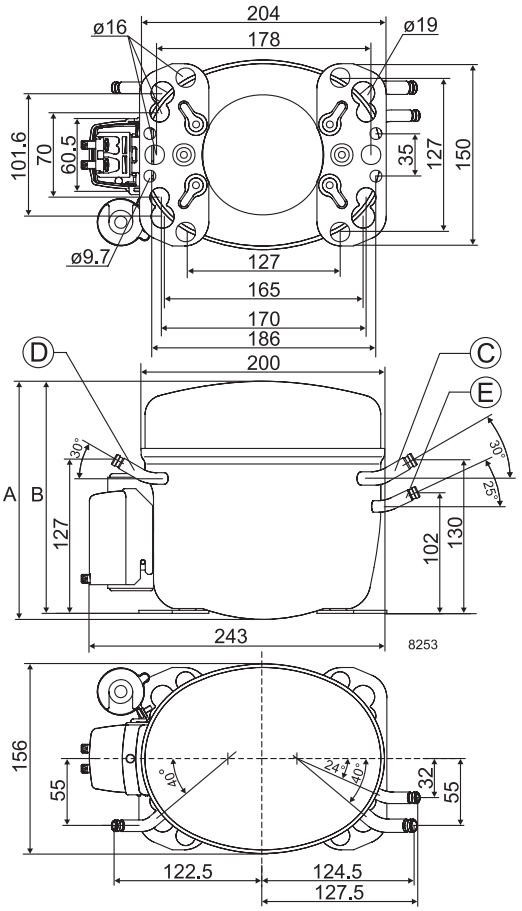
ø16
204
178
ø19
101.6
70
60.5
35
127
150
ø9.7
127
165
170
186
D
200
C
E
A B
30°
30°
25°
127
102
130
243
8253
156
55
40°
24°
40°
32
55
122.5
124.5
127.5

SC

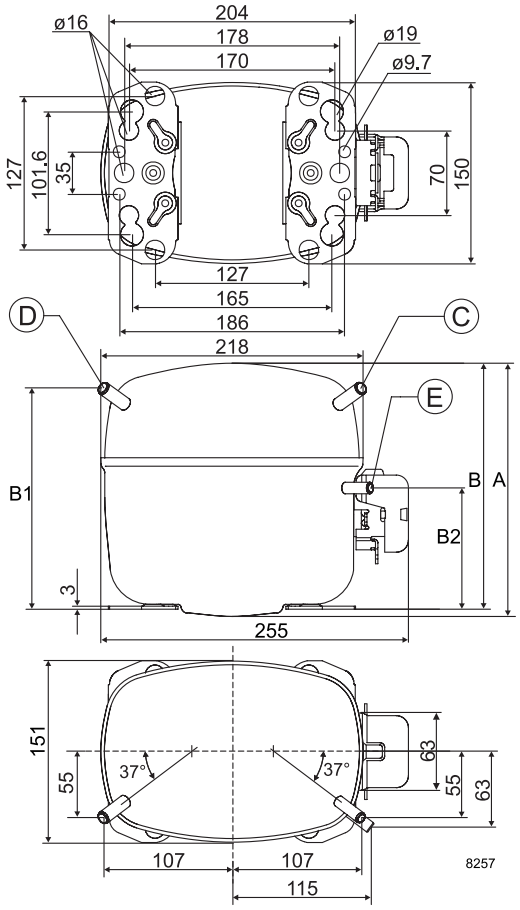

SC-Twin

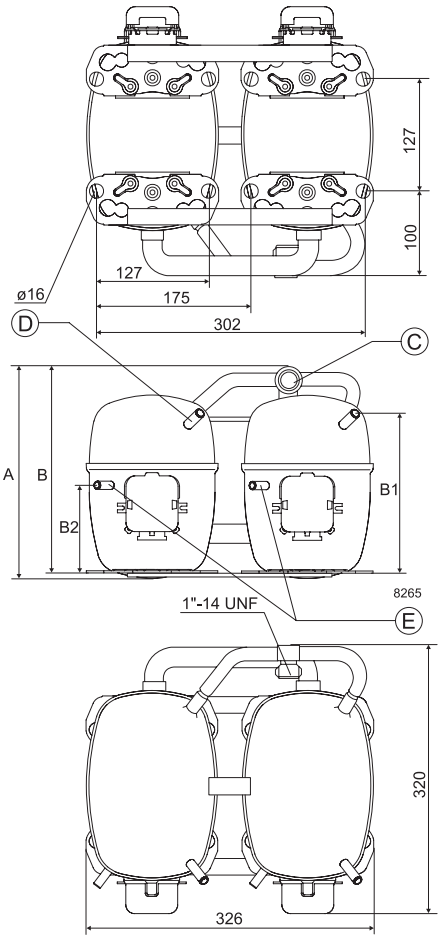

GS

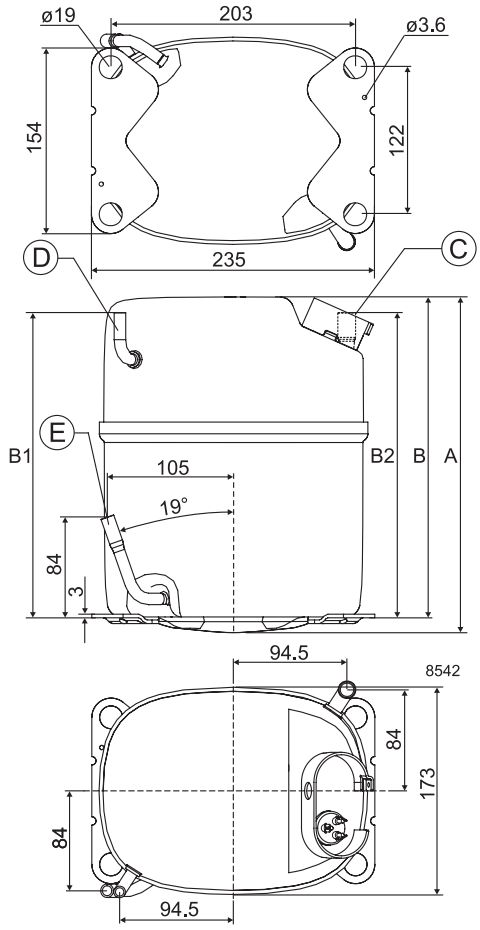

GS34CLX (interchanged connectors)

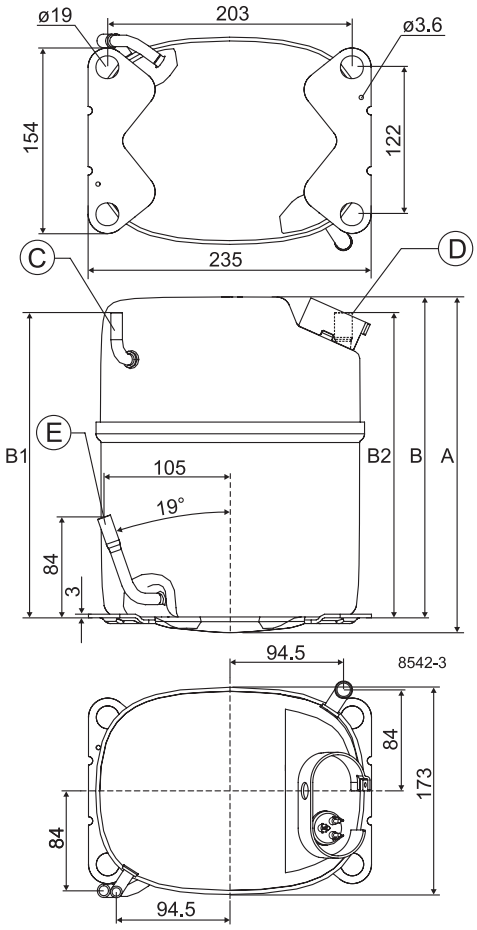

LST - RSIR

PL-DLE

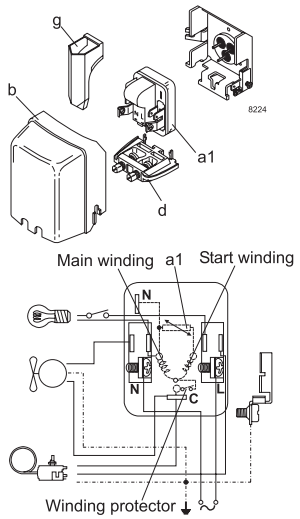

TL/TLES/TLS/TLY - NL/NLE - FR

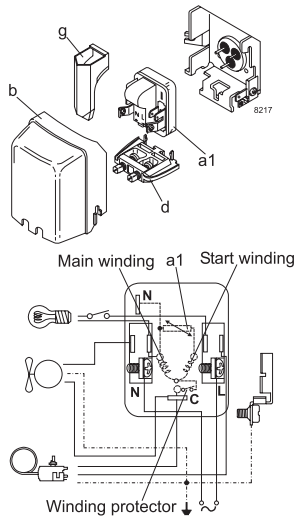

LST - RSCR

PLE - DLE/DLX/DLY

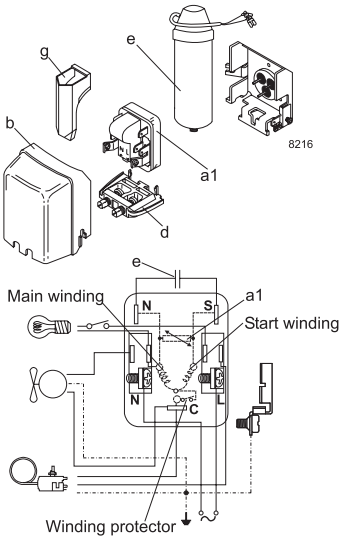

HST - CSIR

PL - DLE

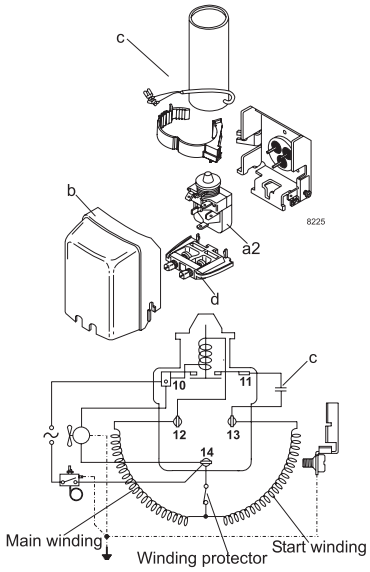

TL/TLES/TLS - NL/NLE - FR

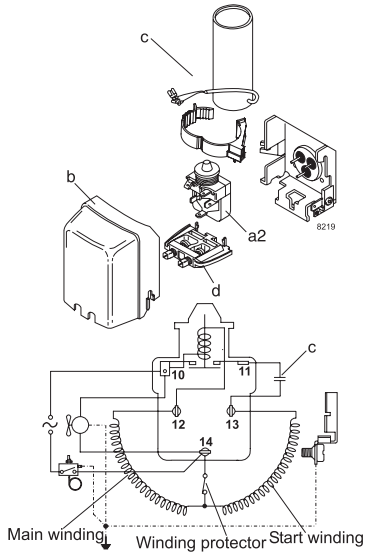

LST - RSCR

TLES/TLS/TLX/TLY - NLE/NLU/NLX/NLY

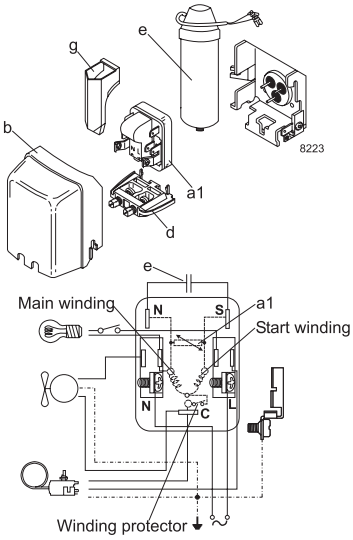

Legend

- **a1:** PTC starting device
- **a2:** Starting relay
- **a3:** Starting device
- **b:** Cover
- **b1:** Clamp (part of compressor)
- **b2:** Gasket (part of compressor)
- **c:** Starting capacitor
- **d:** Cord relief
- **e:** Run capacitor
- **f:** Protector
- **g:** Protection screen for PTC
- **h:** Holder

HST - CSIR

SC Twin

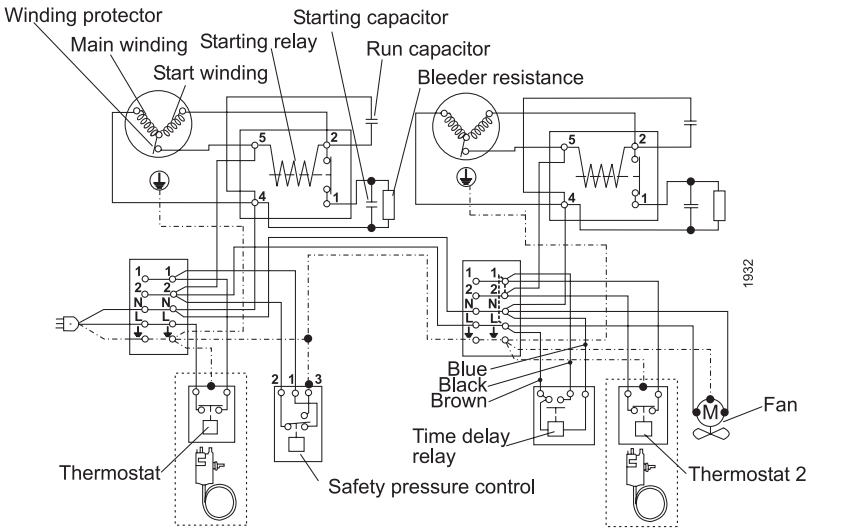

LST - RSIR

TF/TFS - NF - FF - external protector

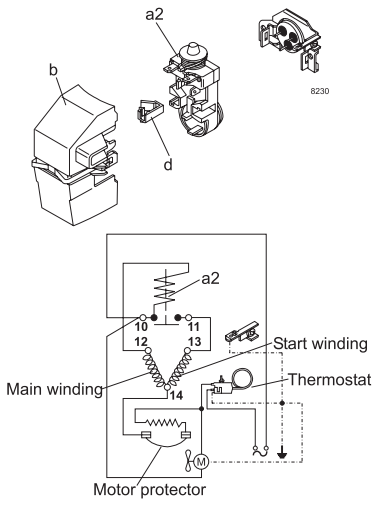

TT - external protector

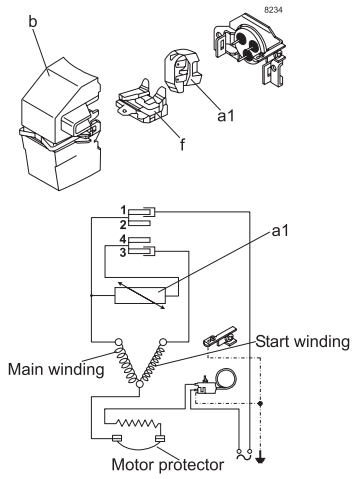

TF - NF - FF - external protector

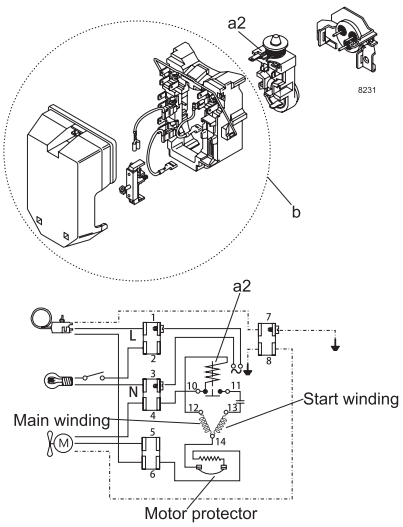

HST - CSIR

TFS - NF - FF - external protector

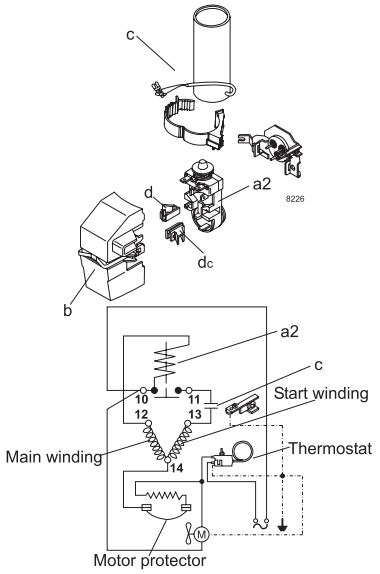

FF - external protector

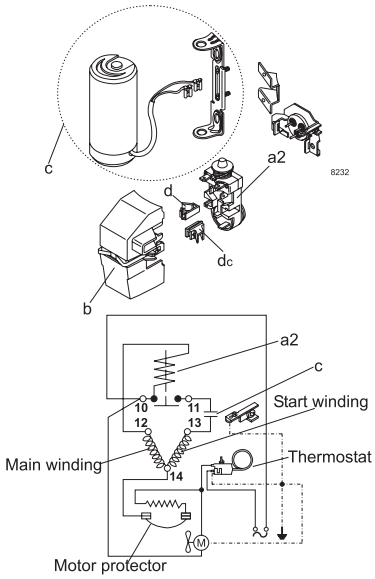

TF - NF - FF - external protector

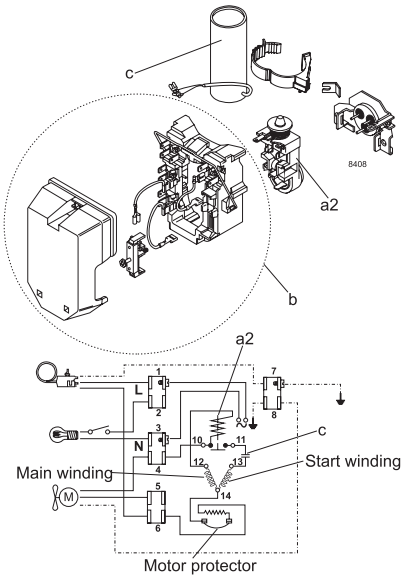

HST - CSR

SC Twin

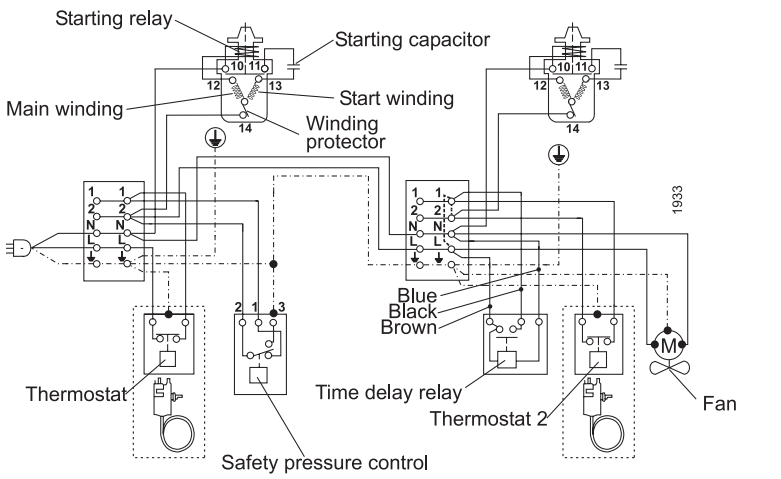

Remove wire L-1 if time delay is used

Remove wire 1-2 if thermostat 2 is used

LST - RSCR

TTE/TTY - NTX/NTY - external protector

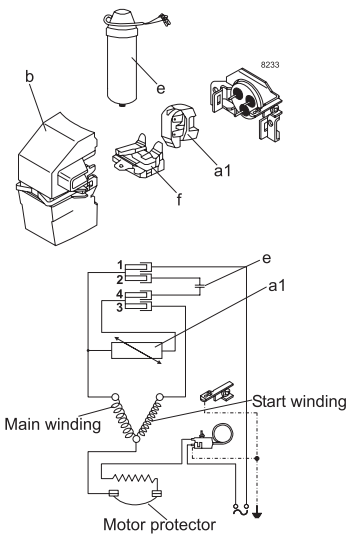

HST - CSIR

SC

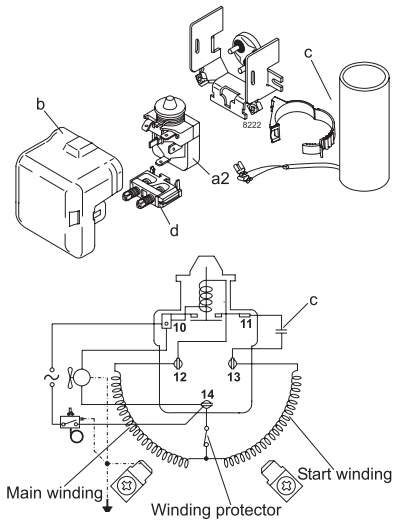

SC - external protector

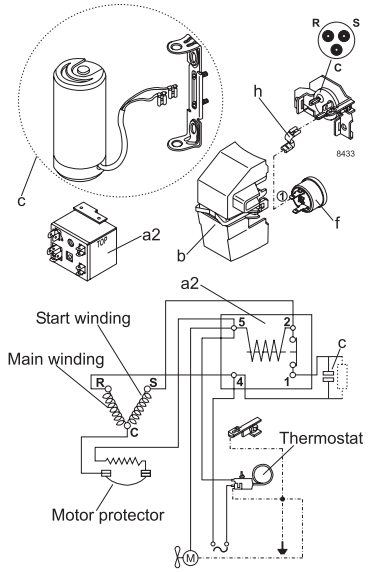

SC - external protector

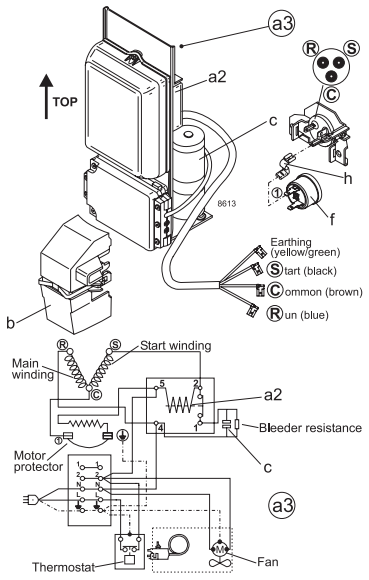

LST - RSIR

SC

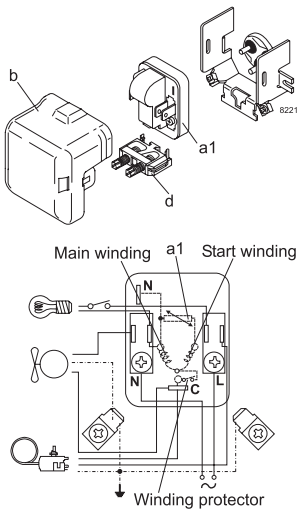

HST - CSR

SC - external protector

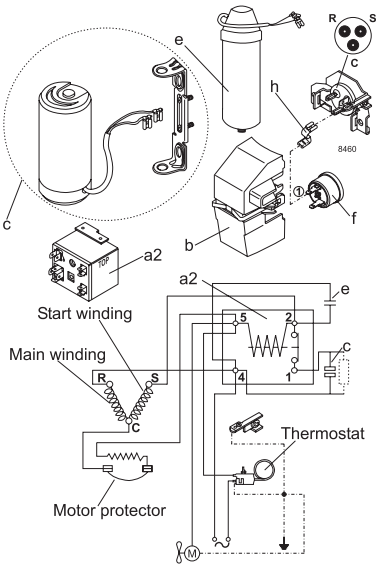

SC - external protector

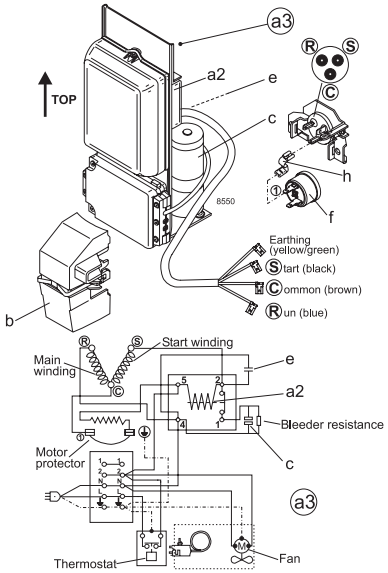

HST - CSR

SC

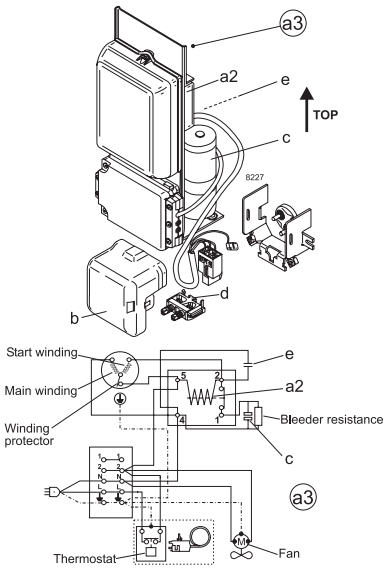

SC (kit) - alternative to starting device

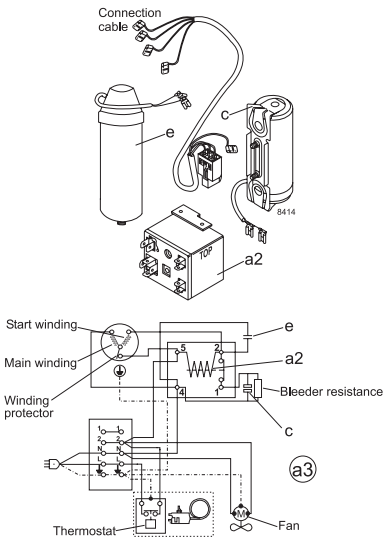

GS

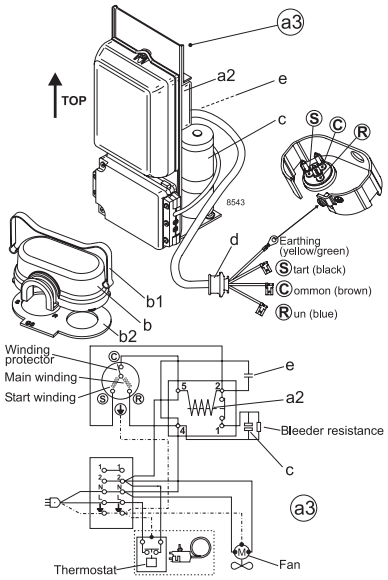

Mounting accessories

Mounting	Code number	Bolt / pin dimension	Comp. base hole	Type of packaging	Compressor series	Parts list
Bolt joint	118-1917	M6 metric	16 mm	Single pack for one compressor	BD- / P- / T- / X- / D- / N- / F- / S-Series	I
Bolt joint	118-1918	M6 metric	16 mm	Industrial pack in any quantity	BD- / P- / T- / X- / D- / N- / F- / S-Series	I
Bolt joint	107B9150	M8 metric	19 mm	Single pack for one compressor	G-Series	II
Bolt joint	118-1946	1/4 inch	16 mm	Single pack for one compressor	BD- / P- / T- / X- / D- / N- / F- / S-Series	III
Bolt joint	118-1949	1/4 inch	19 mm	Single pack for one compressor	all with 19 mm base holes (except G-Series)	IV
Snap-on	118-1947	Ø 7.3 mm	16 mm	Single pack for one compressor	BD- / P- / T- / X- / D- / N- / F- / S-Series	V
Snap-on	118-1919	Ø 7.3 mm	16 mm	Industrial pack in any quantity	BD- / P- / T- / X- / D- / N- / F- / S-Series	V

Parts list (4 pcs. per compressor needed)		
I	Sleeve Ø 8 mm x 6.4 mm x 0.8 mm	112-2052
	Washer Ø 20 mm x Ø 6.7 mm x 1 mm	112-2053
	Bolt M6 x 25 mm	681X1130
	Nut M6	118-3659
	Rubber grommet 16 mm	118-3661
II	Sleeve Ø 11 mm x 8.6 mm x 1.2 mm	107B9152
	Washer Ø 20 mm x Ø 8.8 mm x 1.2 mm	107B9155
	Bolt M8 x 40 mm	107B9153
	Nut M8	107B9154
	Rubber grommet 19 mm	107B9151
III	Sleeve Ø 8.3 mm x 6.7 mm x 0,8 mm	112-2088
	Washer Ø 20 mm x Ø 6.7 mm x 1 mm	112-2053
	Bolt 1/4 x 1 inch, 20 UNC	119-3002
	Nut 1/4 inch, 20 UNC	119-3031
	Rubber grommet 16 mm	118-3661
IV	Sleeve Ø 9.5 mm x 7.9 mm x 0,8 mm	112-2085
	Washer Ø 20 mm x Ø 6.7 mm x 1 mm	112-2053
	Bolt 1/4 x 1 1/4 inch, 20 UNC	119-3002
	Nut 1/4 inch, 20 UNC	119-3031
	Rubber grommet 19 mm	118-3666
V	Steel pin	118-3586
	Washer Ø 21 x Ø 8.1 mm x 0.9 mm	118-3588
	Clip	118-3585
	Rubber Grommet 16 mm	118-3661

Symbol drawings

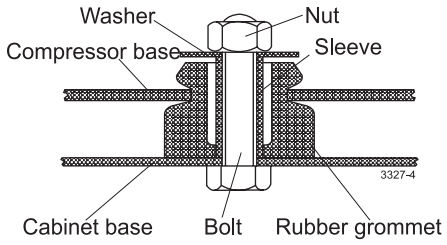

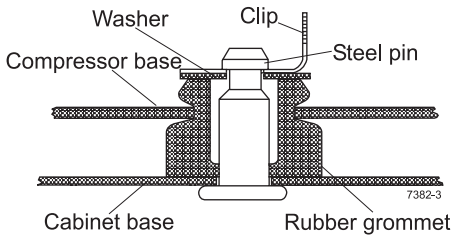

Further information

Applications
LBP: Low Back Pressure
HBP: High Back Pressure
MBP: Medium Back Pressure

Motor types
RSIR: Resistant Start Induction Run
RSCR: Resistant Start Capacitor Run
CSIR: Capacitor Start Induction Run
CSR: Capacitor Start Run

Compressor cooling
S = Static cooling normally sufficient
O = Oil cooling
F1 = Fan cooling 1.5 m/s (compressor compartment temp. equal to ambient temperature)
F2 = Fan cooling 3.0 m/s necessary

Starting devices
LST: Low Starting Torque
LST is used with capillary tube control and pressure equalizing. (Pressure equalizing may exceed 10 minutes).The PTC starting device requires 5 minutes cooling before each start.
HST: High Starting Torque
HST consisting of relay and starting capacitor is used for expansion valve control or for capillary tube control without pressure equalizing.
ePTC: Electronically controlled PTC
- Compressor restart possible after a few seconds
- Operational wattage loss reduced by 2 watt
- PTC protection screen not needed (surface temp. < 82 °C)

Accessories for SC Twin

SC10/10, SC12/12 and SC15/15:

Service valve for 12 mm tube	118-7350
Solder connector for 12 mm tube	104B0584

SC18/18 and SC21/21:

Service valve for 16mm tube	118-7351
Solder connector for 16mm tube	118-7405

SC10/10, SC12/12, SC15/15, SC18/18 and SC21/21:

Seal ring for service valve and solder connector	118-3638
Time delay relay	117N0001
Check valve (to be used with time – delay relay)	020-1014

PTC protection screen

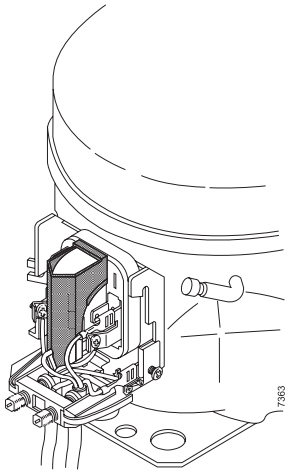

Note:
To fulfil the requirements of EN 60335-2-34 the protection screen 103N0476 must be applied to the PTC starting device.

OUR IDENTITY

At Secop we are committed to our industry and are genuinely passionate about the difference we are able to make for our customers. We understand their business and objectives and the challenges of today's world of refrigeration and cooling systems.

We work in a straightforward way, being open, direct and honest because we want to make things clear and easy. Our people are committed to increasing value for our customers and constantly strive for better performance, knowing that our own progression and success is dependent on theirs.

A NEWCOMER WITH 60 YEARS OF EXPERIENCE

Formerly known as Danfoss Compressors, Secop is one of the founding fathers of modern compressor technology with an experience that goes back to the beginning of the 1950s.

For more than 25 years, Secop has been setting the standard in compressor technology by developing highly efficient variable speed compressors and by compressors working with hydrocarbons (R290 and R600a).

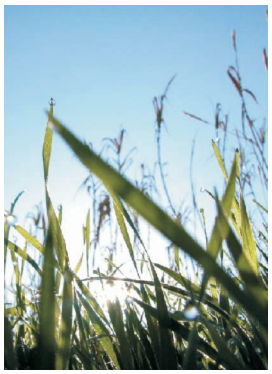

OUR JOURNEY SO FAR

1956 Production facility and headquarters in Flensburg, Germany founded.

1958 Start of production for PW compressors.

1970 Introduction of SC compressors. The birth of a standard-setting platform in the light commercial market.

1972 Introduction of FR compressors.

1977 Introduction TL and BD compressors.

1990 Introduction of NL compressors.

1992 Introduction of PL compressors.

1993 Start of production with natural refrigerant R600a (isobutane). Production facility in Crnomelj, Slovenia founded.

1999 Start of production with natural refrigerant R290 (propane).

2002 Production facility in Zlate Moravce, Slovakia founded.

2005 Introduction of GS compressors.

2008 Production facility in Wuqing, China founded.

2010 Introduction SLV-CNK.2 and SLV-CLK.2 variable speed compressors. Introduction BD1.4F Micro DC compressor. Introduction of DLX and NLU compressors.

2013 Introduction of the XV compressor - opening a new chapter in refrigeration history. Secop acquires ACC Fürstenfeld, Austria.

2015 New generation of energy-efficient propane compressors. New variable speed platforms for household and light commercial applications.

Secop GmbH · Mads-Clausen-Str. 7 · 24939 Flensburg · Germany · Tel: +49 461 4941 0 · **www.secop.com**

Secop can accept no responsibility for possible errors in catalogues, brochures and other printed material. Secop reserves the right to alter its products without notice. This also applies to products already on order provided that such alterations can be made without subsequential changes being necessary in specifications already agreed. All trademarks in this material are property of the respective companies. Secop and the Secop logotype are trademarks of Secop GmbH. All rights reserved

Produced by Secop | July 2016

DES.B.050.J1.02